DECTRIS
detecting the future

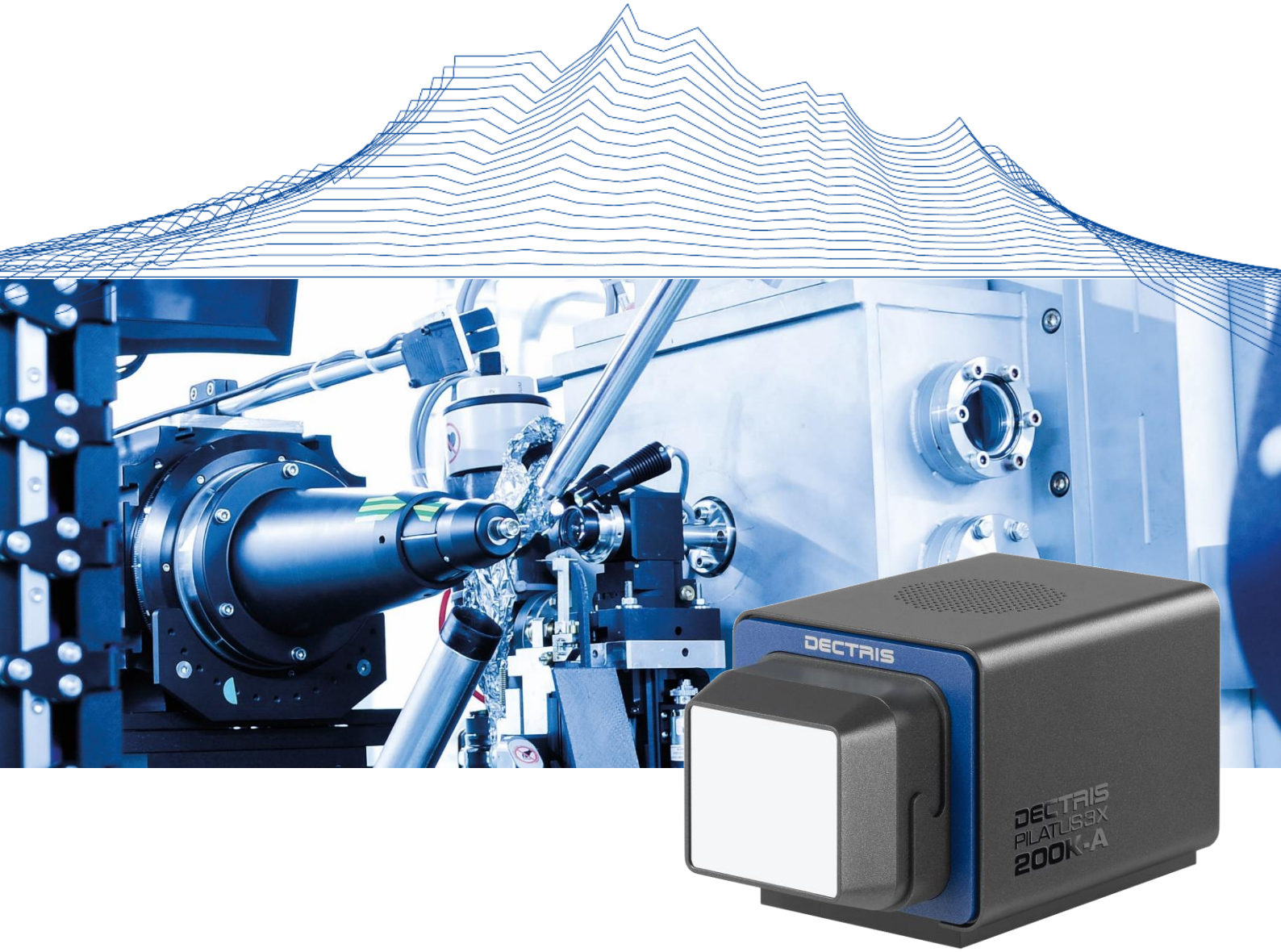

Technical Specifications

PILATUS3 X 200K-A
Detector System

Document Version v1.2.0

DECTRIS Ltd.

5405 Baden-Daettwil
Switzerland
www.dectris.com

Document Version v1.2.0
© Copyright 2020
DECTRIS Ltd.

CONTENT

CONTENT i

DOCUMENT HISTORY iii
Current Document . . . iii
Changes . . . iii

1 GENERAL INFORMATION 1
1.1 Contact and Support . . . 1
1.2 Explanation of Symbols . . . 1
1.3 Warranty Information . . . 2
1.4 Disclaimer . . . 2

2 USE OF THE PILATUS3 X 200K-A 3
2.1 Product Return and Recycling . . . 3

3 TECHNICAL SPECIFICATIONS 4
3.1 Specifications . . . 4
3.1.1 Quantum Efficiency . . . 4
3.1.2 Detector . . . 4
3.1.3 Power Supply Unit . . . 5
3.1.4 Detector Control Unit . . . 5
3.2 Ratings . . . 6
3.2.1 Detector . . . 6
3.2.2 Power Supply Unit . . . 6
3.2.3 Detector Control Unit . . . 6
3.3 Ambient Conditions . . . 7

4 DETECTOR DIMENSIONS AND CONNECTORS 8
4.1 PILATUS3 X 200K-A Detector . . . 8
4.1.1 Technical Drawing . . . 8
4.1.2 Front Side of the Detector . . . 8
4.1.3 Back Side of the Detector . . . 10
4.1.4 Status LEDs . . . 11
4.1.5 Connectors and Connecting Cables/Pipes . . . 11
4.2 Detector Control Unit . . . 12
4.2.1 Configuration of the Detector Control Unit . . . 12
4.2.2 Connectors . . . 13
4.2.3 Samba Share . . . 14

5 INSTALLING THE DETECTOR SYSTEM 15
5.1 Transport Considerations . . . 15
5.2 Mounting . . . 15
5.2.1 Mounting from Above . . . 15
5.2.2 Mounting from Below . . . 16
5.3 Grounding of the Detector . . . 17
5.4 Connection to Dry Air or Nitrogen . . . 18
5.5 Mounting the Detector Control Unit . . . 18

6 TEMPERATURE AND HUMIDITY CONTROL 19

7 OPERATION PROCEDURE 20
7.1 Getting Started . . . 20
7.2 Start-up Procedure . . . 20
7.3 Turning Off the Detector . . . 21
7.4 Storing the Detector . . . 21
7.5 Cleaning and Maintenance . . . 21

8 TROUBLESHOOTING 22
9 CERTIFICATION TESTS 24
10 SERVICE FORM 25

DOCUMENT HISTORY

Current Document

Table 1: Current Version of this Document

Version	Date	Status	Prepared	Checked	Released
v1.2.0	2020-07-09	release	LG	AD	LG

Changes

Table 2: Changes to this Document

Version	Date	Changes
v1.2.0	2020-07-09	New Linux Distribution
v1.1.3	2020-01-16	Low Energy Calibration Option
v1.1.2	2019-12-03	New Server J.
v1.1.1	2019-10-03	New Server O.
v1.1.0	2019-07-09	Update of corporate design of PILATUS R, S and X series.
v1.0.0	2019-06-28	First Release.

1. GENERAL INFORMATION

1.1. Contact and Support

Address:	DECTRIS Ltd. Taefernweg 1 5405 Baden-Daettwil Switzerland
Phone:	+41 56 500 21 02
Fax:	+41 56 500 21 01
Homepage:	http://www.dectris.com/
Email:	support@dectris.com

Should you have questions concerning the system or its use, please contact us via telephone, e-mail or fax.

1.2. Explanation of Symbols

Danger	#0
Danger blocks are used to indicate immediate danger or risk to personnel or equipment.	

Warning	#0
Warning blocks are used to indicate danger or risk to personnel or equipment.	

Caution	#0
Caution blocks are used to indicate danger or risk to equipment.	

Information	#0
Information blocks are used to highlight specific information.	

1.3. Warranty Information

Should your detector require warranty service, contact DECTRIS for further information. Before shipping the system back, please contact DECTRIS to receive the necessary transport and shipping information. Make sure that the original packaging is used when returning the system.

Caution	#1
Do not ship the system back before you receive the necessary transport and shipping information.	

When returning the detector system for repair, be sure to fill out and include the service form at the back of this document to provide the support division with the necessary information.

1.4. Disclaimer

DECTRIS has carefully compiled the contents of this manual according to the current state of knowledge. Damage and warranty claims arising from missing or incorrect data are excluded.

DECTRIS bears no responsibility or liability for damage of any kind, also for indirect or consequential damage resulting from the use of this system.

DECTRIS is the sole owner of all user rights related to the contents of the manual (in particular information, images or materials), unless otherwise indicated. Without the written permission of DECTRIS it is prohibited to integrate the protected contents in this publication into other programs or other websites or to use them by any other means.

DECTRIS reserves the right, at its own discretion and without liability or prior notice, to modify and/or discontinue this publication in whole or in part at any time, and is not obliged to update the contents of the manual.

2. USE OF THE PILATUS3 X 200K-A

The PILATUS3 X 200K-A detector system has been designed for the detection of X-rays produced by synchrotrons or laboratory sources. It is intended for indoor use only. For other applications, please contact DECTRIS technical support for additional information.

Caution	#2
⚠	Improper use of the DECTRIS detector system can compromise its safety and its functionality is no longer guaranteed.

2.1. Product Return and Recycling

We recycle DECTRIS detector systems that are no longer suitable for use. If you are not using your DECTRIS detector system any more, send it back to us. We will make sure that your system is responsibly and safely recycled. This is free for customers who purchased a new DECTRIS detector system.

3. TECHNICAL SPECIFICATIONS

3.1. Specifications

3.1.1. Quantum Efficiency

Table 3.1: Quantum Efficiency

Sensor thickness[1]		450 µm	1000 µm
Quantum efficiency at	5.4 keV (Cr)	94 %	> 80 %
	8.0 keV (Cu)	98 %	96 %
	17.5 keV (Mo)	47 %	76 %

3.1.2. Detector

Table 3.2: Technical Specifications

Number of modules (W x H)	1 x 2 = 2
Sensor	Reverse-biased diode array
Sensor material	Silicon (Si)
Pixel size (W x H)	172 µm x 172 µm
Module size (W x H)	83.8 mm x 33.5 mm
Pixel array format (W x H)	487 pixels x 407 pixels = 198 209 pixels
Intermodule gap [pixel]	hor. -, vert. 17 pixels
Image bit depth	32 bit
Readout bit depth	20 bit
Counter overflow state	1 048 575
Maximum count rate	>2 × 10^6 photons/s/pixel
Energy range [2]	5.4 keV to 36 keV
Adjustable threshold range[2]	3.5 keV to 18 keV
Energy resolution of threshold	500 eV
Number of thresholds	1

[1] The sensor thickness of your actual system can be found in the order confirmation and in the file header of recorded images
[2] Low energy, extended low energy and ultra low energy calibrations offering lower minimal thresholds (2.3 keV, 1.9 keV and 1.6 keV respectively) are optionally available. The energy calibration of your actual system can be found in the order confirmation and in the factory acceptance test sheet. Please read carefully the "Low Energy Calibration" technical specification add-on before using thresholds lower than 2.7 keV.

Table 3.2: Technical Specifications - continued

Maximum frame rate	500 Hz **Information #1** When using the external trigger or external enable mode, the detector will not acquire an image if the effective frame rate is above 500 Hz.
Readout time	0.95 ms
Point-spread function	1 pixel (FWHM)
Connection to control unit	1 x 10GBase-T Ethernet
Power supply	External power supply
Data format (file writer)	Raw data, TIF, EDF, CBF
Software interface	Through socket connection; Clients for EPICS, SPEC and stand-alone operation are available
Dimensions (W x H x D)	156 mm x 155 mm x 284 mm
Weight	5.4 kg
Overvoltage category	II
Means of protection	I (External TreNew (SINPRO) power supply)
Pollution degree	II
Maximum operating altitude	2000 m a.s.l.
Cooling	Air cooling

3.1.3. Power Supply Unit

The PILATUS3 X 200K-A is delivered with the power supply unit TreNew (SINPRO) MPU130-105. It is a switching power supply. Use only the included power supply. Please consult the user documentation of the TreNew (SINPRO) MPU130-105 power supply unit for details.

3.1.4. Detector Control Unit

The PILATUS3 X 200K-A is delivered with the detector control unit DELL PowerEdge R440. It is a rack-mounted (1U) high performance server. Please consult the user documentation of the DELL PowerEdge R440 server for details.

3.2. Ratings

3.2.1. Detector

Table 3.3: Power Ratings

Detector power input	+12 V DC, 30 W
Fuse	4 A slow-blow fuse. Type: Schurter 5 mm x 20 mm, 4 A, 250 V AC Part No. 0001.2510 **Warning #1** ⚠ Always replace fuses with the same type.
Detector external trigger input	2.1 V to 5.0 V high level 0.0 V to 0.8 V low level **Caution #3** ⚠ Absolute maximum is 5 V. Applying a higher voltage will damage the detector.
External trigger input impedance	50 Ω
Detector trigger output	5 V (max. current 100 mA)

3.2.2. Power Supply Unit

Table 3.4: Power Supply Unit Ratings

Power input	100 VAC to 240 VAC, 47 Hz to 63 Hz, 1.58 A to 0.64 A
Power output	12 V DC, max. 10.84 A, 130 W
AC connector	IEC-320-C14 input inlet
Dimensions	89.5 mm x 49.3 mm x 188.0 mm
Weight	0.8 kg

3.2.3. Detector Control Unit

Table 3.5: Detector Control Unit Ratings

Power input	2 x 100 VAC to 240 VAC, 50/60 Hz, 3.7 A to 7.4 A, 550 W (Platinum) 1+1 redundant, hot swappable power supply unit
Dimensions (W x H x D)	482.4 mm (434.0 mm without rack latches) x 42.8 mm x 715 mm
Weight	16.73 kg to 19.9 kg
Chassis	1U

3.3. Ambient Conditions

The PILATUS3 X 200K-A detector is equipped with a temperature and a humidity sensor. When either sensor detects that the operating conditions are not met, the detector will shut off. However, as the sensors may not prevent damage, temperature and humidity should be monitored to avoid breaching the operation limits.

Information	#2
The relative humidity within the module chamber must be lower than 30 % during operation and lower than 25 % during start up (use of dry air or nitrogen advised).	

The PILATUS3 X 200K-A detector is designed for indoor use only. The ambient conditions shown in table 3.6 must be satisfied. The stated values are for the ambient conditions.
Values inside the detector, in particular due to the dry-air or nitrogen supply, are different. These are described in section 5.4 and chapter 6.

Table 3.6: Detector operating ambient conditions

Ambient Condition	Value
Operating temperature	+20 °C to +35 °C
Operating humidity	<30 % at + 20 °C, non-condensing
Storage temperature	+15 °C to +40 °C
Storage humidity	<40 % at +20 °C, non-condensing

Please consider following points when storing the detector:

- Make sure the temperature and the humidity inside the transport box do not exceed the specified range (use of a drying agent is required).
- Ensure that no condensation moisture develops if the detector is stored at low temperature.

4. DETECTOR DIMENSIONS AND CONNECTORS

4.1. PILATUS3 X 200K-A Detector

4.1.1. Technical Drawing

Information #3

3D step files of the PILATUS3 X 200K-A detector are available on request. Please contact DECTRIS technical support for more information.

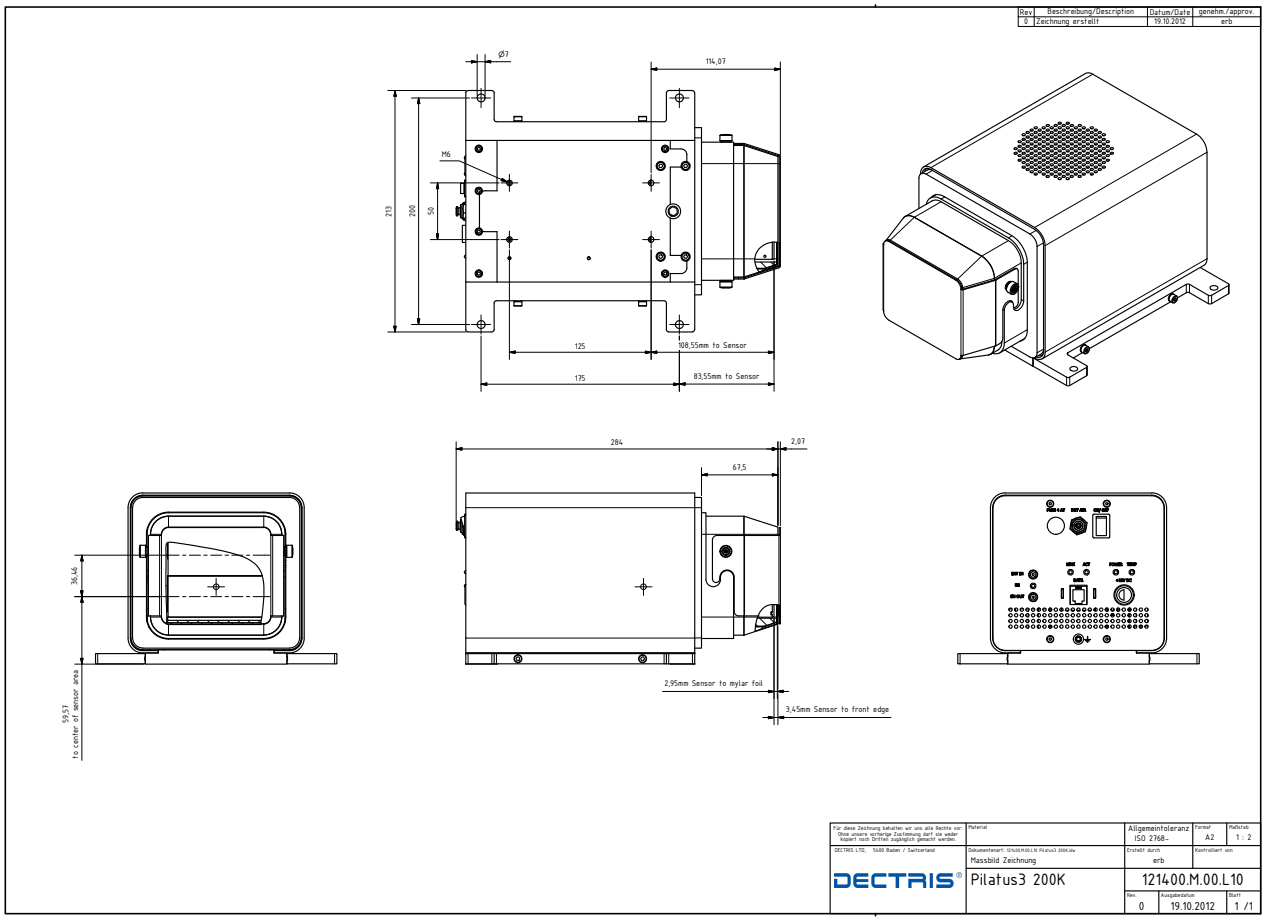

Figure 4.1: Drawing of the PILATUS3 X 200K-A Detector (also printed separately in the user documentation folder.)

4.1.2. Front Side of the Detector

Danger #1

Danger of electric shock. Do not touch the Mylar® foil. The sensors behind the Mylar® foil are operated at high voltages. Touching the Mylar® foil can cause an electrical shock.

Warning #2

Do not touch the Mylar® foil to avoid damage of the sensors.

Caution	#4

The cover may not protect the detector from a direct beam.

Figure 4.2: The PILATUS3 X 200K-A detector with the cover in place (front view).

The detector comes with a protective cover (2 mm low carbon steel sheet metal) for the front window, which should only be removed during operation. The sensors are behind a 12 µm thick Mylar® (PET) foil coated with 100 nm aluminium to protect them from humidity and ambient light.

Figure 4.3: The PILATUS3 X 200K-A detector with the cover removed (front view).

4.1.3. Back Side of the Detector

Figure 4.4: The PILATUS3 X 200K-A detector (back view).

4.1.4. Status LEDs

Table 4.1: The meaning of the status LEDs on the detector back plane

LED	Description
LINK	Glowing green if detector and DCU are powered and connected via the RJ45 data cable.
ACT	Flashing green if there is activity on the data line between detector and DCU.
EN	Orange to indicate the detector is in counting mode, but is otherwise off.
TEMP	Red at power-on, when the detector is not initialized, or if the detector temperature or humidity is out of the limits. Turns green on detector initialization if temperature and humidity are within the allowed limits.
POWER	Green when the power supply is functioning. Red is an indication of power failure or if the detector temperature or humidity is out of the operating limits.

4.1.5. Connectors and Connecting Cables/Pipes

Table 4.2: Electric Connectors and Connecting Cables

Connector	Description
DATA	1 x RJ45 Ethernet connector DATA → detector control unit port 1 Use Cat 6A S/FTP Ethernet cable(s). Caution #5 ⚠ There must be a 1 x 10GBase-T Ethernet point-to-point connection between detector and detector control unit.
POWER	DC power connector (see tables 3.3 and 3.4)
EXT IN	External trigger input (see table 3.3) Use a Lemo® Type 00 (NIM/CAMAC) cable.
EN OUT	Output signal 5 V (max. current 100 mA) (see table 3.3) High when counting is enabled. Use a Lemo® Type 00 (NIM/CAMAC) cable.
⏚	Functional ground Information #4 Although the detector might be already grounded via the mounting bolts, the detector should be grounded additionally via the functional ground connector at the back to establish a defined grounding.

Table 4.2: Electric Connectors and Connecting Cables - continued

Connector	Description
FUSE	Fuse (see table 3.3)

Table 4.3: Air Connectors

Connector	Description
N_2/Dry Air	Nitrogen or dry air for humidity control. Use a hose/pipe with an outer diameter of 4 mm. To release the tube press and hold the blue ring before pulling at the tube.

4.2. Detector Control Unit

4.2.1. Configuration of the Detector Control Unit

Please do not install or run any other software on the computer, except tools and software which are necessary for configuring your data acquisition protocol.
The detector control unit is set up with a standard installation of the CentOS 7.x distribution. Regular system updates can be made. However, to avoid operational deterioration do not update the system while the detector is taking data.

Caution #6

Do not remove the symbolic link in the directory `~/p2_det/images`, which points to the `images` directory.

The detector control unit has to be connected point-to-point to the detector via 1 x 10GBase-T Ethernet. The detector control unit can be integrated into the site network infrastructure using one of the interfaces described in section 4.2.2. The detector control unit is optimised for performance and stability of operation. In order to achieve these goals we deliver the detector control unit with fixed firmware (bios etc.) and software (OS) version.

Figure 4.5: PILATUS3 X 200K-A detector control unit as seen from the front.

Caution #7

Pushing the power button on the front panel longer than 2 seconds will immediately halt the detector control unit. All image data on the detector control unit will be permanently lost.

Information #5

Briefly pushing the power button on the front panel will shut down the detector control unit. May take up to 1 min.

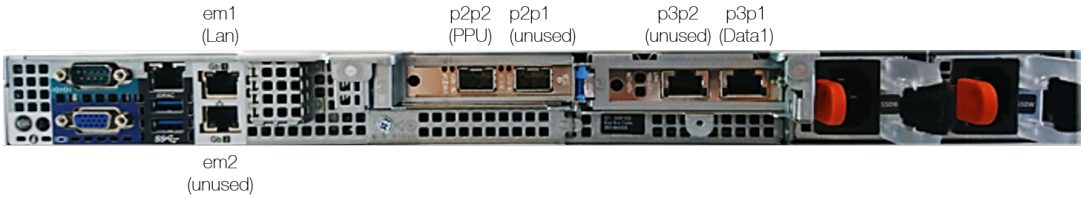

Figure 4.6: PILATUS3 X 200K-A detector control unit as seen from the back.

4.2.2. Connectors

Table 4.4: Detector Control Unit Connectors

Connector	Description
EM1 (Embedded, figure 4.6)	1 GBase-T adapter labeled as LAN User configurable GbE Network Interface Preconfiguration: DHCP
EM2 (Embedded, figure 4.6)	Unused)
P2P1 (Slot 1, figure 4.6)	Unused
P2P2 (Slot 1, figure 4.6)	10 Gbit SFP+ Ethernet adapter labeled as PPU (if available) is reserved for the PILATUS Processing Unit (PPU) static IP address (10.10.10.10) The start-up script /etc/rc.local disables ARP. Do not change this!
P3P1 (Slot 2, figure 4.6)	10 Gbit SFTP Ethernet adapter Detector Interface Port1 labeled as Data1 Static 10.0.10.1 The start-up script /etc/rc.local disables ARP. Do not change this!
P3P2 (Slot 2, figure 4.6)	Unused
2 x Power (figure 4.6)	AC Connector

See DELL owner's manual for further details.
Note: ARP is re-enabled if the network service has been restarted. In this case execute the startup script /etc/rc.local as super user or reboot the system. To assure stable operation of the detector system the configuration file /etc/sysctl.conf is changed such that the Ethernet rx and tx buffers are larger than the standard setting.

The firewall and SE Linux are disabled by default (otherwise the following ports must be open for UDP: 52010, 52011, 52012). The following firewall port must be open if you want to connect to Camserver with a TCP/IP socket connection from the outside: 41234

4.2.3. Samba Share

There is a Samba share configured on the DCU. The Samba service is enabled by default and running after the system boots.
The storage directory for the images, /home/det/p2_ det/images, which is a symbolic link to /home/det/images, can be accessed from a Samba client. You need the same user name and password as for the normal console or ssh login.
From a Linux or Mac OSX terminal window issue the following command:

smbclient

server-ip-or-hostname/images -U det

To browse the Samba share from Windows, type
server-ip-or-hostname/images in the Windows Explorer address bar.

5. INSTALLING THE DETECTOR SYSTEM

5.1. Transport Considerations

Warning	#3
Avoid vibration and shock when moving the detector.	

The detector has been delivered in a robust transport box. Please keep this transport box for transport or storage purpose.

5.2. Mounting

Do not place the detector near heat sources or in a place subject to direct sunlight, excessive dust or mechanical shock. Make sure that the detector has adequate ventilation.

- Do not cover any air intakes or outlets.
- Place the detector in a location with adequate air circulation.
- Make sure the detector has enough space for proper ventilation (minimum wall distance: 170 mm).
- Do not operate the detector in a closed environment.

The detector can be mounted in the ways which are described below.

5.2.1. Mounting from Above

Use the mounting brackets[1] as depicted in figure 5.1. These mounting brackets have to be mounted on the base plate of the detector. The detector should be mounted using all four outer 7 mm holes (indicated with yellow circles).

Caution	#8
Make sure the mounting brackets are mounted and properly tightened using the screws provided.	

[1] Mounting brackets are available upon request. Please contact support@dectris.com for further information.

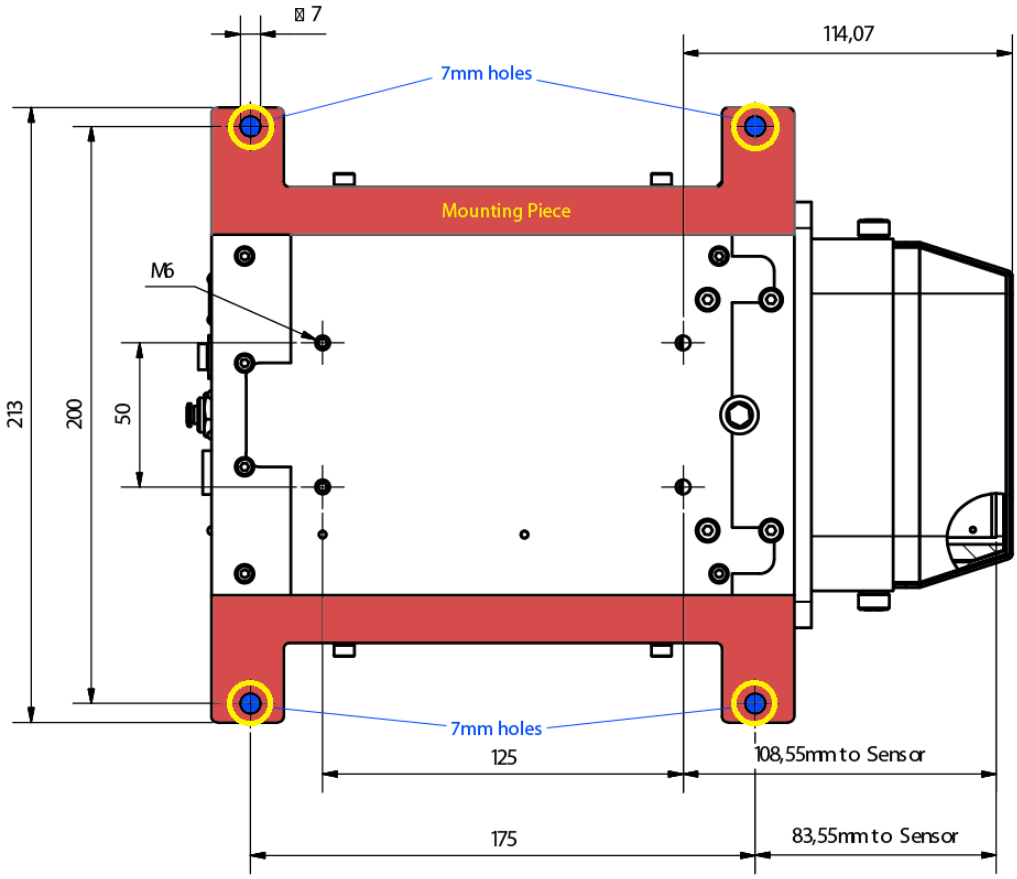

Figure 5.1: Drawing of the PILATUS3 X 200K-A detector base plate with mounting brackets (bottom view).

5.2.2. Mounting from Below

Warning	#4

It is strictly forbidden to add any threads to the detector base plate or to the detector housing.

The detector should be mounted using the four internal M6x1 threads as shown in figure 5.2 (indicated with yellow circles).

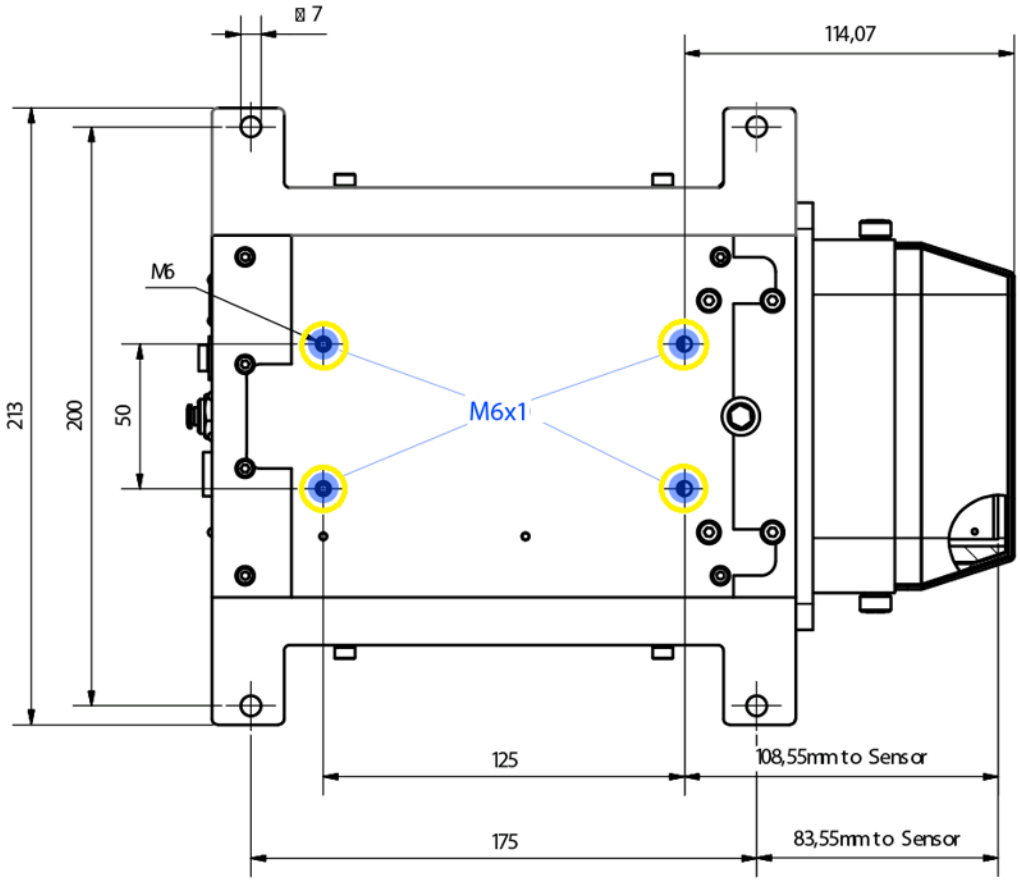

Figure 5.2: Drawing of the PILATUS3 X 200K-A detector base plate (also printed separately in the user documentation folder).

Caution	#9
⚠	The four M6 screws must not intrude into the detector more than 10 mm.

5.3. Grounding of the Detector

Caution	#10
⚠	The main plug of the detector control unit and the power supply of the detector have to be connected to a grounded power outlet.

Although the detector might be already grounded via the mounting bolts, the detector should be grounded additionally via the functional ground connector at the back in order to establish a defined grounding.

5.4. Connection to Dry Air or Nitrogen

Caution	#11

Humidity might damage the detector. Make sure that the detector is operated within the allowed ambient conditions (see section 3.3).

The PILATUS3 X 200K-A detector has to be connected to a dry air (or nitrogen) source to avoid humidity and condensation damage when it is outside of the storage box. For information on system connections, refer to chapter 4 and for storage of the detector system refer to chapter 7.

Please consider the following points for the application of dry air or nitrogen:

- Oil free, dry air of <20 % relative humidity or nitrogen must be used.
- The recommended flow is 5 L h^{-1} to 10 L h^{-1} (at 2 bar).
- For reliable operation we recommend dry air of <5 % relative humidity.
- The gas pressure must not exceed 2 bar.
- The minimum gas pressure is 1 bar.
- The humidity control shuts down the power of the detector modules when the humidity is too high (see chapter 6).

5.5. Mounting the Detector Control Unit

Caution	#12

Make sure that the detector control unit has adequate ventilation.

The detector control unit can be mounted in a standard 19 inch rack, which has to be properly grounded.

6. TEMPERATURE AND HUMIDITY CONTROL

The PILATUS3 X 200K-A detector has a combined temperature and relative humidity sensor. The temperature and humidity control shuts down the detector when the relative humidity or the temperature of the sensor exceeds the limits in table 6.1.

Table 6.1: Temperature and relative humidity limits

Shutdown Temperature		Shutdown Relative Humidity
Lower Limit	Upper Limit	Upper Limit
20 °C	45 °C	30 % at operation / 25 % at start-up

The communication with the detector control unit will remain active after a temperature shut down. To start the detector correctly, please refer to chapter 7 and execute the correct start-up procedure.
For stable operation, a constant detector temperature is recommended. After switching on the detector, its temperature will reach a constant value after about 30-60 min. The detector temperature (read out with command THread in Camserver) will be around 6-8 °C above ambient temperature. For stable long term measurements, we recommend to control the ambient temperature within a range of ±2 °C.

Information #6

A change of the detector temperature will affect the DACs on the readout chip, and thus the measured number of counts in a pixel.

Information #7

A free-flowing air stream is mandatory in order to properly cool the electronics inside the detector. Do not cover the detector's top surface.

If the temperature or humidity is out of range, the following error message appears:

[]$_ Camserver Output

```
*** ERROR - temperature too high: 31.1C (channel #2)
Bad return from dcbe_initialize()
Camera initialization error -- press <enter> to exit
```

Make sure that the cooling unit is running at the specified temperature and that nitrogen or dry air flow is turned on at the specified flow rate, given in section 5.4. Then restart the Camserver software.

The command THread in camserver displays the actual temperature and humidity of the sensors as shown below.

[]$_ Camserver Output

```
THread
Channel 1: Temperature = 25.7C, Rel. Humidity = 4.4 %
Channel 2: Temperature = 23.1C, Rel. Humidity = 8.2 %
```

7. OPERATION PROCEDURE

Before operating the detector, make sure you have read the Technical Specifications and the User Manual of the PILATUS3 X 200K-A detector.

7.1. Getting Started

Before switching on:

- Mount the detector properly.
- Connect the detector to ground potential, using the functional ground connector (see section 5.3).
- Connect detector to power; make sure the detector power switch is OFF.
- Connect the detector to a nitrogen or dry air source, capable of supplying at least the minimum recommended flow rate (see section 5.4).
- Connect the power cable, the local network cable, and the detector data cable to the detector control unit. If more than one Ethernet cable is required, please pay attention to the numbering of the cables as described in table 4.2.
- Attach a monitor, keyboard and mouse to the detector control unit.

7.2. Start-up Procedure

Please use the following start-up procedure:

- Turn on the dry air or nitrogen at least 30 min before turning on the detector. Then turn ON the power switch at the back of the detector.
- Turn on the detector control unit. Wait at least till the detector control unit is booted (about 5 min) before trying to connect.
- Start a shell.
- The default path is: /home/det.
- Change the directory to: p2_det/.
- Type: ./runtvx (it starts a script which initializes the detector system and opens the Camserver and TVX windows).
- Let the detector reach its operation temperature (see section 3.3). This will take between 30-60 min. The operation temperature can be determined by typing the command THread in Camserver (compare chapter 6).

Information	#8
If you want to control the detector with a TCP/IP client, type ./camonly in the directory p2_det/. It starts a script which initializes the detector system and opens the Camserver window. Please refer to the User Manual for further information.	

The detector should now be ready to use.

Information	#9
The software start-up procedure is described in detail in the User Manual.	

7.3. Turning Off the Detector

To turn off the detector:

- Turn OFF the detector power switch.
- Do not remove the nitrogen/dry air connection. It is a requirement that it is left at the recommended flow rate, according to section 5.4.

If you turn off the detector while Camserver is running you will get error messages after a few minutes because Camserver cannot communicate with the detector. You may want exit Camserver.

Caution	#13
You must restart Camserver after the detector has turned on! Otherwise the detector is not initialized.	

7.4. Storing the Detector

Information	#10
Even if the detector is not in operation, it is recommended that the dry air or nitrogen flow is maintained to reduce the risk of humidity damage to the detector.	

Please follow these instructions:

- Put the detector in a plastic bag, add at least 200 g of drying agent (i.e. silica gel) into the bag and seal it air-tight.
- Check the humidity and change the drying agent frequently for compliance with the storage requirements in section 3.3.

7.5. Cleaning and Maintenance

Caution	#14
The Mylar® foil must not be touched or cleaned. If it becomes dirty or is damaged, please contact DECTRIS technical support.	

The housing can be cleaned with a soft tissue.

The PILATUS3 X 200K-A detector does not require any maintenance.

8. TROUBLESHOOTING

An overview of possible problems with the detector system and instructions in order to solve the problems is provided in table 8.1. If the problem you are experiencing is not listed below or if the instructions do not help, please contact support@dectris.com.

Table 8.1: Troubleshooting

Problem	Cause	Solution
Detector control unit does not start properly.	Detector control unit is not powered.	Check the User Documentation of the detector control unit (see section 3.1.4). Check the power cable; depending on the type of detector control unit, there are switches on the back and on the front panel of the detector control unit, which have to be in the correct position.
Communication error, the detector is not found at start-up.	Data cable is not connected or defective.	Check the connection between detector control unit and detector. Make sure that there is a direct, peer-to-peer connection between the detector control unit and the detector. Avoid tangling or strong bending of the Ethernet data cable. Check the status of the LINK LED. If the detector control unit and the detector are powered and correctly connected, the LINK LED should be green (Takes up to 30 s after power up)
	The configuration of the Ethernet adapter is wrong.	Check configuration of the Ethernet adapter, see section 4.2.1.

Table 8.1: Troubleshooting - continued

Problem	Cause	Solution
Detector shuts down.	Temperature or humidity error.	Check that the detector is properly supplied with coolant. Check the flow of nitrogen or dry air. Check the temperature of the coolant at the front panel of the thermal stabilization unit. Check the temperature of the detector with the command in Camserver: type THread. Wait until the detector cools down. Restart the detector again. Check the LEDs at the back of the detector: If the TEMP and the POWER LEDs are red, a temperature or humidity error has occurred.
	Module over current: The energy threshold level is set too low and the detector starts oscillating.	Increase the threshold level. In Camserver type: setCu.
The detector fails to turn on.	The power cord is not connected or the plug is incompletely inserted.	Connect the power cord firmly. Check the green POWER LED.
	The fuse is blown.	Replace the fuse, see table 3.3.
	The temperature is over the critical limit. The thermal protection was triggered.	Check the thermal stabilization unit. The detector will power on again, as soon as the temperature is within the allowed operating conditions.
Image acquisition is not possible.	Detector is not properly initialized.	Run the following commands in TVX: - setdac - calibdet - expose 1 Check the status of the POWER LED. If it is red and the TEMP LED is green, there is a problem with the electronics – contact support@dectris.com.
Detector housing is humid.	Ambient humidity around the detector exceeds the operating conditions.	Shut down the detector immediately and check the humidity. Power up the detector only when the ambient humidity has been reduced.

9. CERTIFICATION TESTS

The product is in conformity with the following standards:

Table 9.1: Certification Tests for PILATUS3 X 200K-A

EN 61010-1: 2010 / IEC 61010-1: 2010
EN 61326-1: 2013 / IEC 61326-1: 2012

10. SERVICE FORM

Model No.: _____ Serial No.: _____ Date: _____

Name and phone No.: _____

Company: _____

List of all control settings. Describe the problem and check boxes below that apply to the problem.

_____

_____

_____

_____

_____

_____

_____

_____

☐ Checked all cables

☐ Problem on power-up

☐ Detector system is unstable

What power line is used? _____

Ambient temperature? _____

Relative humidity? _____

Add additional information. If the user has made special modifications, please describe. _____

_____

_____

_____

_____

_____

_____

_____

_____